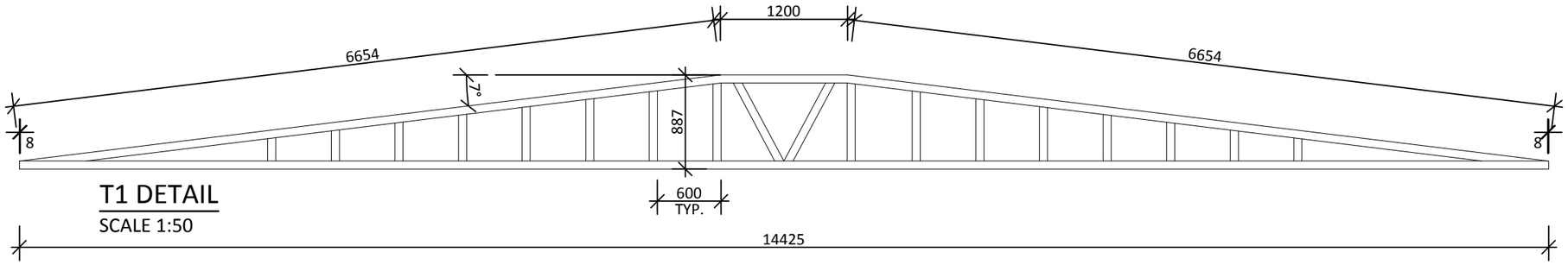

T1 DETAIL

SCALE 1:50

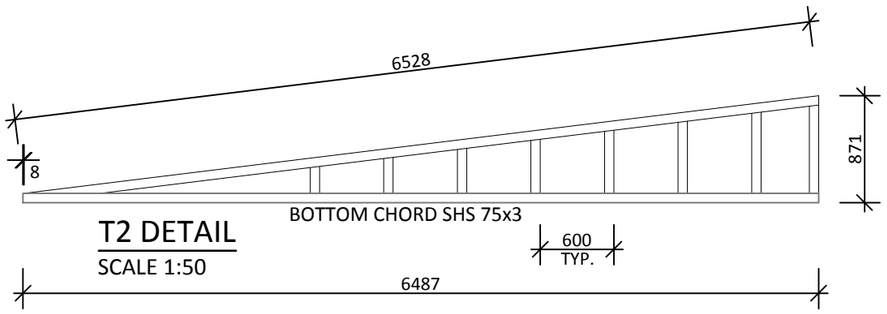

T2 DETAIL

SCALE 1:50

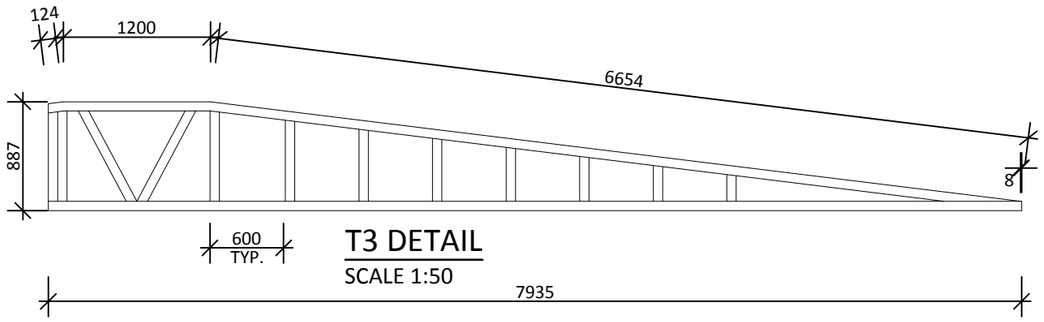

T3 DETAIL

SCALE 1:50

FULLY WELDED STEEL
TRUSS's. ALL MEMBERS
RHS 76 x 38 x 1.6
CAP OFF ALL OPEN ENDS

PANGALLO DESIGN SERVICES

GENERAL NOTES
1. ALL DIMENSIONS TO BE VERIFIED ON SITE PRIOR TO COMMENCEMENT OF WORKS.
2. USE WRITTEN DIMENSIONS ONLY, DO NOT SCALE DRAWINGS.
3. READ IN CONJUNCTION WITH OTHER DRAWINGS, SPECIFICATIONS & CONSULTANTS DOCUMENTATION.
4. REFER ANY DISCREPANCIES IMMEDIATELY TO THE DESIGNER & AWAIT WRITTEN INSTRUCTION.

THIS DOCUMENT AND ANY OF THE DOCUMENT'S INFORMATION, IDEAS AND CONCEPTS ARE THE PROPERTY OF PANGALLO DESIGN SERVICES AND MAY NOT BE USED, COPIED OR REPRODUCED WITHOUT EXPRESS WRITTEN PERMISSION.

ABN 8365 692 4486
GOSNELLS, PERTH
WESTERN AUSTRALIA 6110

T 0405 145 977
E APDRAFTING@LIVE.COM

SHEET
TRUSS DETAILS

PROJECT
14.4m x 9.9m

DRAWING NO.
A-7.02

TD GRANNY FLATS AND MODULAR HOMES

SCALE	SIZE	DRAWN	DATE	REVISION
1:50	A3	AP	19/04/21	B

PROJECT NO.
DSN00117

PROJECT CLIENT
LESLEY HEAL

PROJECT ADDRESS
353 WALGY RD,
BEVERLEY
WA 6304

NO.	DESCRIPTION	DATE	BY	CHK'D
A	ISSUED FOR APPROVAL	7/04/2021	AP	
B	ISSUED FOR APPROVAL	19/04/2021	AP	